MANUAL PART NUMBER: 400-0426-004

SW104-130

2-IN VIDEO+ AUDIO TO TWISTED PAIR (TP) OUTPUT, AUTO-SWITCHER/TRANSMITTER USER'S GUIDE

ALTINEX®

SIGNAL MANAGEMENT SOLUTIONS®

Tel: 714-990-2300 • Toll-Free: 1-800-ALTINEX • FAX: 714-990-3303 • E-mail: solutions@altinex.com • Web: www.altinex.com

TABLE OF CONTENTS

Page
PRECAUTIONS / SAFETY WARNINGS 2
GENERAL 2
INSTALLATION 2
CLEANING 2
FCC NOTICE 2
ABOUT YOUR SW104-130 3
TECHNICAL SPECIFICATIONS 3
PRODUCT DESCRIPTION 5
APPLICATION DIAGRAMS 5
DIAGRAM 1: TYPICAL SETUP 5
DIAGRAM 2: INTERNAL VIEW 6
INSTALLING YOUR SW104-130 7
OPERATION 7
VIDEO EQUALIZATION 7
SWITCH MODES 7
CABLE/ACCESSORIES 7
TROUBLESHOOTING GUIDE 8
LEDs ARE OFF 8
UNIT DOES NOT AUTO-SWITCH 8
NO DISPLAY 8
ALTINEX POLICIES 9
LIMITED WARRANTY/RETURN POLICIES 9
CONTACT INFORMATION 9

ALTINEX®
SIGNAL MANAGEMENT SOLUTIONS®
Tel: 714-990-2300 • Toll-Free: 1-800-ALTINEX • FAX: 714-990-3303 • E-mail: solutions@altinex.com • Web: www.altinex.com

PRECAUTIONS / SAFETY WARNINGS 1

Please read this manual carefully before using your **SW104-130** Switcher. Keep this manual handy for future reference. These safety instructions are to ensure the long life of your **SW104-130** and to prevent fire and shock hazards. Please read them carefully and heed all warnings.

1.1 GENERAL

- Unauthorized personnel shall not open the unit since there are high-voltage components inside.
- Qualified ALTINEX service personnel or its authorized representative must perform all service.

1.3 INSTALLATION

- For best results, place the **SW104-130** on a flat, level surface in a dry area away from dust and moisture.
- To prevent fire or shock, do not expose this unit to water or moisture. Do not place the **SW104-130** in direct sunlight, near heaters or heat-radiating appliances, or near any liquid. Exposure to direct sunlight, smoke, or steam can harm internal components.
- Handle the **SW104-130** Switcher carefully as dropping or jarring can damage internal components.
- Do not place heavy objects on top of the **SW104-130**.
- To turn off the main power, be sure to remove the cord from the power outlet. The power outlet should be installed as near to the equipment as possible, and should be easily accessible.
- Do not pull the power cord or any cable that is attached to the **SW104-130**.
- If the **SW104-130** is not used for an extended period, disconnect the power cord from the power outlet.

1.4 CLEANING

- Unplug the **SW104-130** power cord before cleaning. Clean surfaces with a dry cloth. Never use strong detergents or solvents such as alcohol or thinner. Do not use a wet cloth or water to clean the unit.

1.5 FCC NOTICE

- This device complies with Part 15 of the FCC Rules. Operation is subject to the following two conditions: (1) This device may not cause harmful interference, and (2) this device must accept any interference received, including interference that may cause undesired operation.
- This equipment has been tested and found to comply with the limits for a Class A digital device pursuant to Part 15 of the FCC Rules. These limits are designed to provide reasonable protection against harmful interference when the equipment is operated in a commercial environment. This equipment generates, uses, and can radiate radio frequency energy and, if not installed and used in accordance with the instruction manual, may cause harmful interference to radio communications. Operation of this equipment in a residential area is likely to cause harmful interference in which case the user will be required to correct the interference at his own expense.
- Any changes or modifications to the unit not expressly approved by ALTINEX, Inc. could void the user's authority to operate the equipment.

ALTINEX®
SIGNAL MANAGEMENT SOLUTIONS®
Tel: 714-990-2300 • Toll-Free: 1-800-ALTINEX • FAX: 714-990-3303 • E-mail: solutions@altinex.com • Web: www.altinex.com

ABOUT YOUR SW104-130 2

SW104-130

2-In Video+ Audio to TP Output, Auto-Switcher/Transmitter with Local Output

The **SW104-130** Auto-Switcher is designed to switch between two video+ audio sources. The selected source is converted and transmitted using ALTINEX's Twisted Pair standard as well as buffered and output locally. The **SW104-130** is designed for use with an equivalent ALTINEX TP Receiver such as the **TP115-111**.

The **SW104-130** features three modes of operation: auto, manual, and remote. In auto mode, Input 2 is the default selection and the **SW104-130** automatically switches to Input 1 on signal detection. In manual mode, the input is selected using a switch on the side of the unit. Remote switching is made via a contact closure connected to the Input Select jack. The contact may be controlled manually, or by using a control system.

The unit is encased in a solid metal enclosure and ships with an external power adapter. Also included is an external contact-closure switch for manual override of input selection.

The **SW104-130** is perfect for applications that use wall or floor plates for auto-switching. The **SW104-130** may be mounted to furniture or other suitable surfaces using optional hardware.

The latest generation of Twisted Pair devices uses an innovative, patented technology* developed by ALTINEX. The new signal processing technology allows transmitting and receiving fully equalized computer video signals, stereo, and audio signals over long distances. The maximum distance at full UXGA resolution is 400 ft (122 m) between devices and may reach up to 750 ft (230 m) at VGA resolution.

* US Patent 7,065,190

TECHNICAL SPECIFICATIONS 3

Specifications are subject to change.
See www.altinex.com for up-to-date information.

FEATURES/DESCRIPTION	SW104-130
Inputs	
Video	(2) 15-pin HD female
Audio	(2) 3.5 mm female
Contact Closure	DC Power Jack
Outputs	
Video	(1) 15-pin HD female
Audio	(1) 3.5 mm female
CAT-5/6 Twisted Pair	(1) RJ-45 female
Power	DC Power Jack

Table 1. SW104-130 **General**

MECHANICAL	SW104-130
Material	0.091" Al
Finish	Black
Height (inches)	0.96 in (24 mm)
Width (inches)	4.30 in (109 mm)
Depth (inches)	5.20 in (132 mm)
Weight (pounds)	1.0 lbs (0.45 kg)
T° Operating	10°C-35°C
T° Maximum	50°C
Humidity	90% non-condensing
MTBF (calculations)	40,000 hrs (min.)

Table 2. SW104-130 **Mechanical**

ALTINEX®
SIGNAL MANAGEMENT SOLUTIONS®
Tel: 714-990-2300 • Toll-Free: 1-800-ALTINEX • FAX: 714-990-3303 • E-mail: solutions@altinex.com • Web: www.altinex.com

ELECTRICAL	SW104-130
Video Input Signal	
Video Signal	1.5 Vp-p max
Video Impedance	75 ohms
SYNC Signal	TTL (+/-)
SYNC Impedance	10 kohms
Audio Input Signal	
Impedance	10 kohms
Level	0.9 Vp-p max
Twisted Pair Output	
CAT-5/6 Twisted Pair	Video/Sync/Audio Signals ALTINEX Standard
Video Output Signals	
Local Video Gain	0 dB
Local Video Impedance	75 ohms
Local Sync Signal	TTL (+/-)
Video Resolution	VGA through UXGA
Audio Output Signals	
Local Impedance	1 kohm
Local Gain	0 dB
Power	
External Power Adapter	9 VDC (included)
Power Consumption	4 W max.

Table 3. SW104-130 **Electrical**

ALTINEX®
SIGNAL MANAGEMENT SOLUTIONS®
Tel: 714-990-2300 • Toll-Free: 1-800-ALTINEX • FAX: 714-990-3303 • E-mail: solutions@altinex.com • Web: www.altinex.com

PRODUCT DESCRIPTION 4

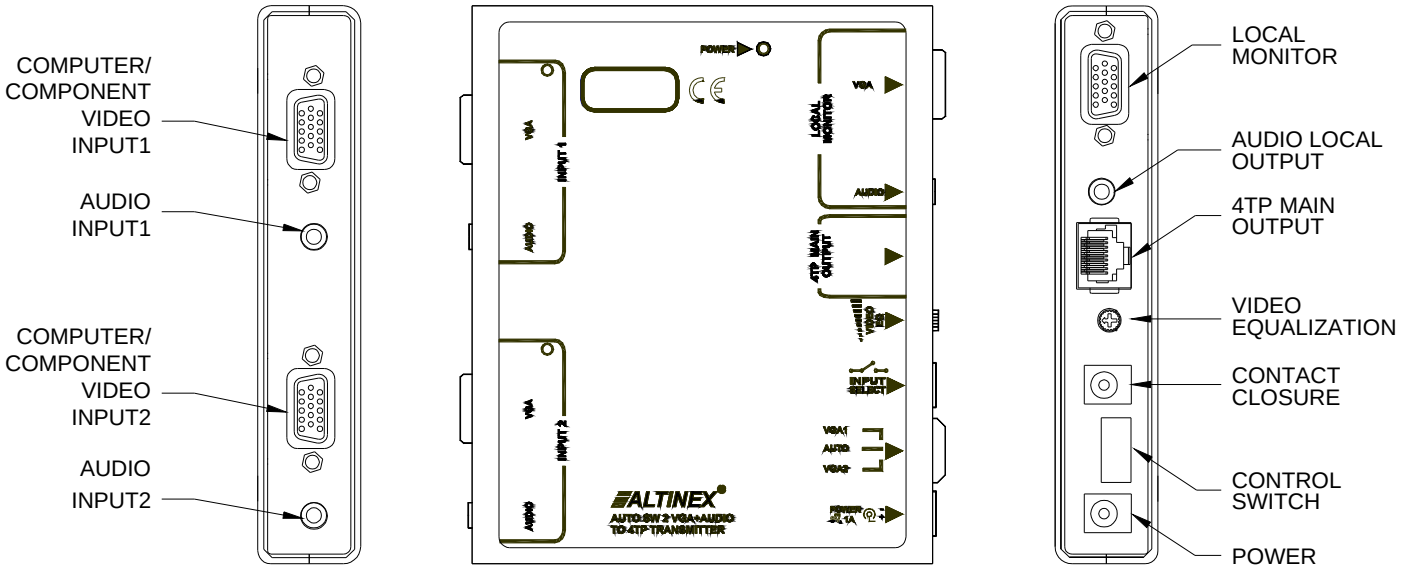

APPLICATION DIAGRAMS 5

DIAGRAM 1: TYPICAL SETUP

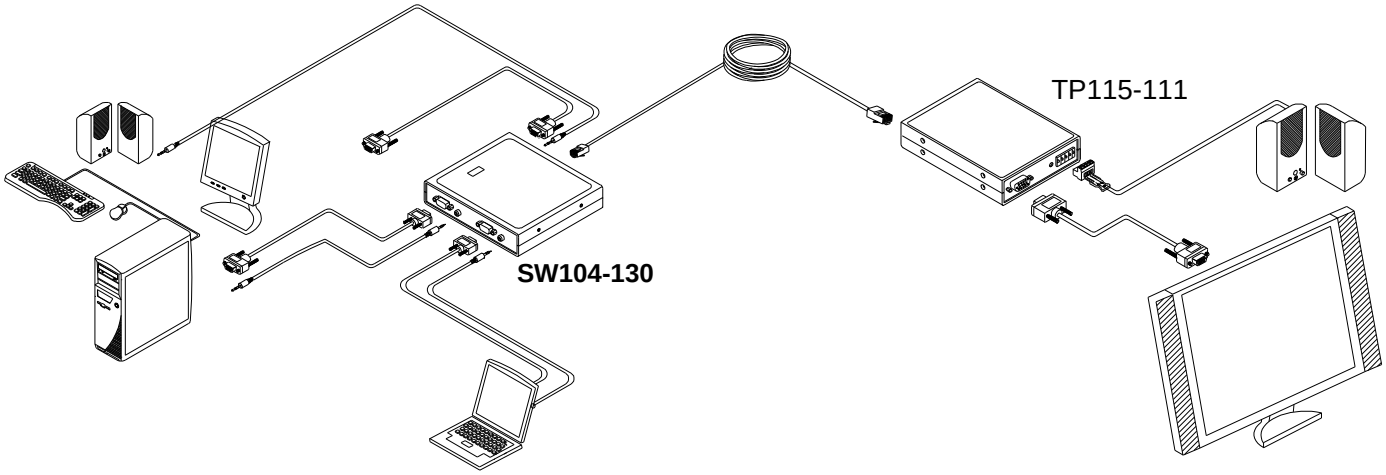

ALTINEX®
SIGNAL MANAGEMENT SOLUTIONS®
Tel: 714-990-2300 • Toll-Free: 1-800-ALTINEX • FAX: 714-990-3303 • E-mail: solutions@altinex.com • Web: www.altinex.com

DIAGRAM 2: INTERNAL VIEW

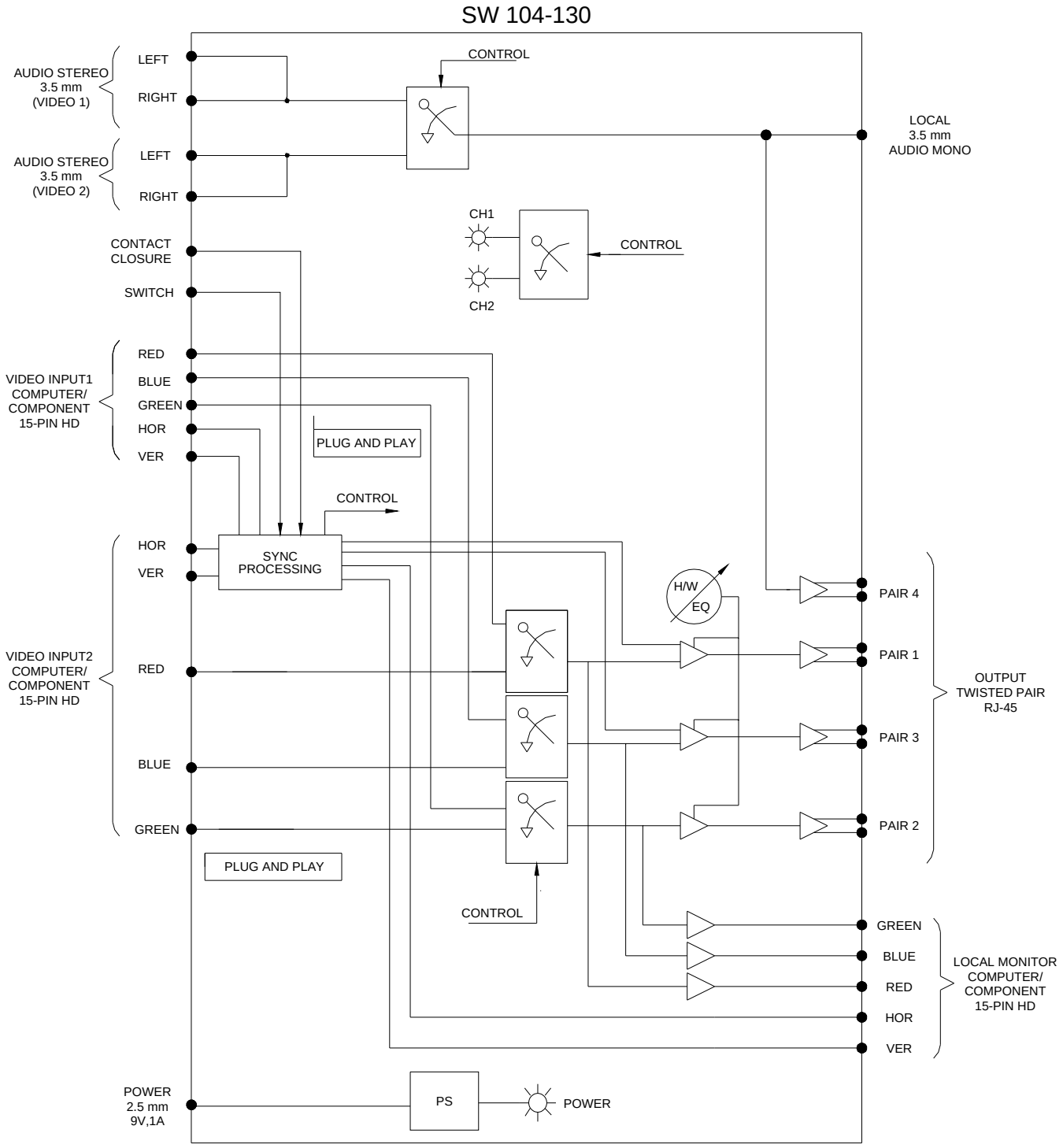

ALTINEX®
SIGNAL MANAGEMENT SOLUTIONS®
Tel: 714-990-2300 • Toll-Free: 1-800-ALTINEX • FAX: 714-990-3303 • E-mail: solutions@altinex.com • Web: www.altinex.com

INSTALLING YOUR SW104-130 6

Step 1. Make sure to use the ALTINEX power adapter supplied with the unit. Connect the power adapter to the power port. The Power and Input 2 LEDs should turn on.

NOTE: Input 2 is the default if there is no signal on Input 1 and the Control Switch is in the Auto position.

Step 2. Connect a video and audio source to Input 1. If there is a properly formatted input signal on Input 1, the switcher will switch to Input 1 automatically, and the Input 1 LED will turn on.

Step 3. Connect a video and audio source to Input 2. If there is a properly formatted input signal on Input 1, the switcher will remain on Input 1.

Step 4. Connect the local video and audio outputs to the local monitor and speakers.

Step 5. If a remote switch is to be used, connect the control cable to the Input Select port. See Section 7 for operation control.

Step 6. Verify that the picture quality on the display is good. If a signal is not being received, make sure that the display is compatible with the resolution of the computer graphics card.

Step 7. Connect the 4TP Main Output to the input of the Twisted Pair receiver.

NOTE: Connect the Twisted Pair receiver per its instructions.

Step 8. The **SW104-130** is now ready for operation. Depending on the length of the cable, the video equalization adjustment may need to be adjusted for optimal performance.

OPERATION 7

The **SW104-130** requires only one adjustment to be made for optimal performance. The adjustment is video equalization for long cable lengths. The remaining controls are for input selection only.

7.1 VIDEO EQUALIZATION

Video equalization is provided to fine-tune the displayed image on the remote display. The equalization adjustments on the **SW104-130** and Twisted Pair receiver work together. Typically, for short cable runs the equalization will be set to near minimum. Cable lengths up to 400 ft (122 m) will require near maximum equalization.

7.2 SWITCH MODES

7.1.1 AUTO-SWITCH MODE

In auto-switch mode, the **SW104-130** automatically selects Input 2 if no active signal is present on Input 1. If a signal is on Input 2 and not on Input 1, the **SW104-130** will maintain Input 2. However, when an active signal is applied to Input 1, the **SW104-130** will switch to Input 1. If active signals are on both inputs, the **SW104-130** will automatically switch to Input 1.

7.1.2 MANUAL-SWITCH MODE

The **SW104-130** control switch allows switching between Input 1 and Input 2. Placing the control switch in either the Input 1 or Input 2 position forces the source signal to the main and local outputs thereby disabling auto-switching.

7.1.3 REMOTE SWITCH MODE

Remote switching is achieved via a contact closure on the Input Select jack. Remote switching mode disables both auto-switching and the Control Switch position. A closed contact selects Input 1 and an open contact selects Input 2.

7.3 CABLE/ACCESSORIES

The remote switching contact closure is available from ALTINEX, part number RC5203CC.

ALTINEX®
SIGNAL MANAGEMENT SOLUTIONS®
Tel: 714-990-2300 • Toll-Free: 1-800-ALTINEX • FAX: 714-990-3303 • E-mail: solutions@altinex.com • Web: www.altinex.com

TROUBLESHOOTING GUIDE 8

We have carefully tested and found no problems in the supplied **SW104-130** unit. However, we would like to offer the following suggestions:

8.1 LEDs ARE OFF

Cause 1: The power adapter is installed wrong.

Solution 1: Make sure the adapter output is connected to the power input jack on the unit. If one of the LEDs is still not on, see Solution 2.

Solution 2: Ensure the adapter is plugged into an AC outlet that has power. If the adapter has AC power and the LEDs are still off, see Cause 2.

Cause 2: The wrong power adapter is installed.

Solution 1: Please use the ALTINEX supplied external adapter. If one of the LEDs is still not on, please call ALTINEX at (714) 990-2300.

8.2 UNIT DOES NOT AUTO-SWITCH

Cause 1: The manual override switch is installed.

Solution: Remove the connection to the Input Select jack on the unit. If a plug is in the jack, even without a switch connected, the **SW104-130** will not auto-switch properly. If the unit does not auto-switch with the plug removed, see Cause 2.

Cause 2: The control switch is not in the auto position.

Solution: Switch the Control Switch to the auto position. If the unit does not auto-switch, see Cause 3.

Cause 3: The signal is not active or is improperly formatted.

Solution 1: Remove the input signals from the switcher. If the Input 2 LED is off, call ALTINEX at (714) 990-2300. If the Input 2 LED is on, see Solution 2.

Solution 2: Connect a properly formatted video type signal to Input 1. If the switcher does not switch to Input 1, see Solution 3.

Solution 3: Bypass the switcher and connect the output of the source directly to the display. If the display is good, then see Cause 4.

Cause 4: The wrong power adapter is installed.

Solution 1: Please use the ALTINEX-supplied external adapter. If the unit still does not auto-switch, please call ALTINEX at (714) 990-2300.

8.3 NO DISPLAY

Cause 1: The source has a problem.

Solution: Check the source and make sure that there is a signal present and all source connections are correct. If the source is working and there is still no display, see Cause 2.

Cause 2: Manual override is ON.

Solution: Make sure there is nothing connected to the Input Select port on the switcher. If there is nothing connected, see Cause 3.

Cause 3: Signal is bad or missing.

Solution 1: Make sure the switcher output is connected to the monitor. If there is still no display, see Solution 2.

Solution 2: Remove both inputs to the switcher and connect the active signal from the source to Input 2. If there is still no display, see Solution 3.

ALTINEX®
SIGNAL MANAGEMENT SOLUTIONS®
Tel: 714-990-2300 • Toll-Free: 1-800-ALTINEX • FAX: 714-990-3303 • E-mail: solutions@altinex.com • Web: www.altinex.com

Solution 3: Bypass the switcher and connect the output of the source directly to the monitor. If the display is good, then call ALTINEX at (714) 990-2300. If there is still no display, see Cause 4.

Cause 4: Cable connections are incorrect.

Solution: Make sure the cables are properly connected. Also, make sure that the continuity and wiring are good. If there is still no display present, see Cause 5.

Cause 5: The display has a problem.

Solution: Make sure the display is powered and is turned on. If there is still no display, please call ALTINEX at (714) 990-2300.

ALTINEX POLICIES 9

9.1 LIMITED WARRANTY/RETURN POLICIES

Please see the ALTINEX website at www.altinex.com for details on warranty and return policies.

9.2 CONTACT INFORMATION

ALTINEX, Inc.

592 Apollo Street

Brea, CA 92821 USA

TEL: 714 990-2300

TOLL FREE: 1-800-ALTINEX

WEB: www.altinex.com

E-MAIL: solutions@altinex.com